BRB-0419.5ASPR

NON-ELEV. ALUM. 4 ROW x 19'-6" BLEACHER

DRAWING REFERENCE NUMBER: NA–0419.5SPR_VP	
DRAWING SHEET INDEX	
1.CS	COVER SHEET
2.TD	SEATING PLAN
3.FP	FOUNDATION PLAN
4.BA	BLEACHER ASSEMBLY – BRACING
5.BA	BLEACHER ASSEMBLY SECTION VIEW
6.AP	ANCHORING PLAN
7.PF	PLANK & FRAMING PLAN
8.VA	VERTICAL AISLE ASSEMBLY
9.GR	GUARDRAIL ASSEMBLY
10.DS	TYPICAL BLEACHER ASSEMBLY DETAILS

RECOMMENDED TOOLS		
SOCKET WRENCH	POP RIVET GUN	CORDLESS DRILL
½" DEEP WELL SOCKET	LEVEL	3/16" DRILL BIT
9/16" DEEP WELL SOCKET	RUBBER MALLET	7/16" DRILL BIT
TAPE MEASURE	GLOVES	SAFETY GLASSES

BUILTRITE BLEACHERS .com
T/F: 866-281-5337 - WWW.ALUMINUM-BLEACHERS.COM

MODEL: BRB-0419.5ASPR				
DESCRIPTION: NON–ELEV. 4 ROW x 19'–6" ASSEMBLY COVER SHEET				
DRAWN BY: HIT	DATE: 9/7/23	REVISION: 0	SCALE: N.T.S.	SHEET NUMBER: 1.CS

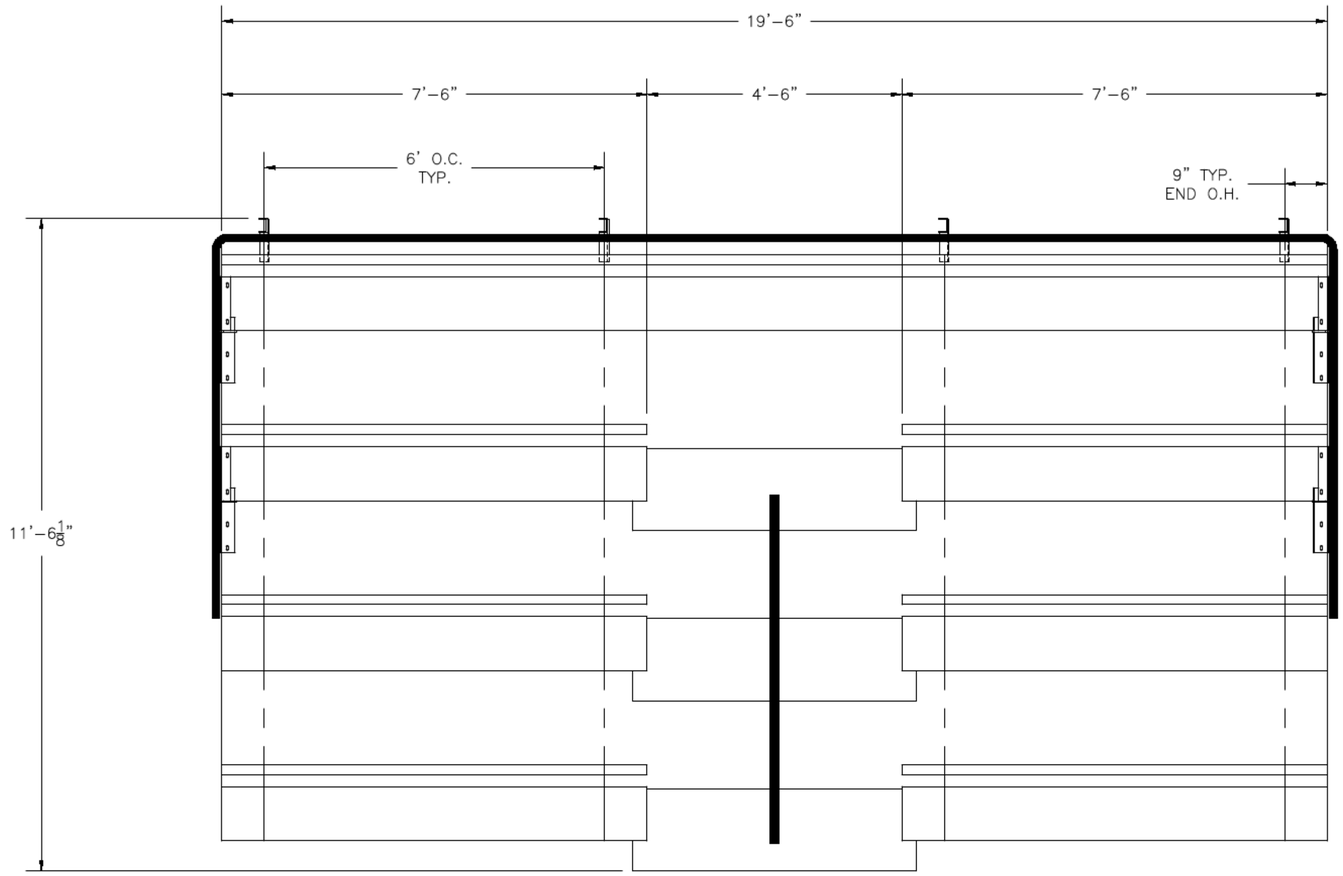

SECTION LENGTH	GROSS SEATS	ACTUAL SEATS	NO. OF ROWS	NET SEATS
19.5	13.00	13.00	1	13
7.5	5.00	5.00	6	30
			NET SEATS	43
			WHEELCHAIR SPACES	0
			TOTAL NET SEATING CAPACITY (BASED ON 18" PER SEAT)	43

BUILTRITE BLEACHERS .com

T/F: 866-281-5337 - WWW.ALUMINUM-BLEACHERS.COM

MODEL:	BRB-0419.5ASPR				
DESCRIPTION:	NON–ELEV. 4 ROW x 19'–6" SEATING PLAN				
DRAWN BY: HIT	DATE: 9/7/23	REVISION: 0	SCALE: N.T.S.	SHEET NUMBER: 2.TD	

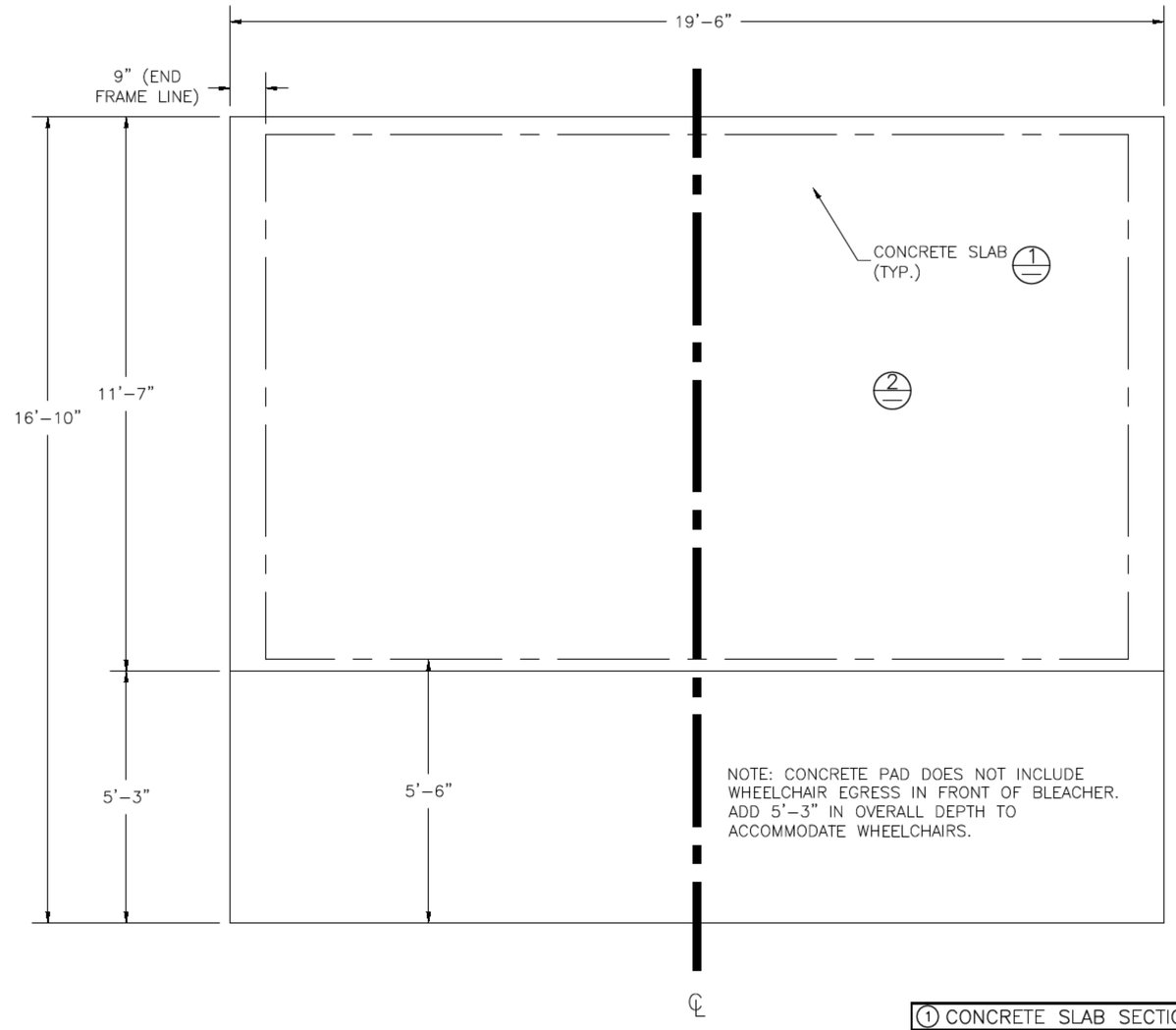

CONCRETE FOUNDATION SPECIFICATIONS

SCOPE:

Foundation construction is not part of NATIONAL RECREATION SYSTEMS, INC's., scope of work unless noted otherwise in the contract documents. The OWNER shall review the foundation design with local code authorities and coordinate with NRS, Inc.

FOUNDATION DESIGN & ANCHORS:

1) The foundation designs are based on the following:
   a) Minimum presumed soil bearing of 2000 psf.
   b) Bleacher frame dead and live load of 700 lbs./ft.
   c) Bleacher frame wind uplift of 250 lbs./ft.
2) Unless otherwise specified on the drawings the bleacher frames shall be attached to concrete with a 12" dia. x 3 3/4" wedge type expansion anchor. The anchors shall be embedded a minimum of 2" into the concrete.

CONCRETE SPECIFICATIONS:

1) All concrete construction shall be in accordance with *ACI 318.08.*
2) All concrete shall be air-entrained using an air entraining admixtruing meeting *ASTM C620* Total air content: 5%-7% per *ASTM C173*
3) All concrete shall have a minimum 28-day strength of Fc=3000psi. Concrete shall have air-entrainment
4) A 1/4" bituminous expansion joint material shall be placed between strip and slab foundations when adjacent to each other.
5) The depressions in the top of the foundations between high spots shall not exceed 5/16" below 10-foot long straightedge. The 10-foot straightedge method used to measure foundation flatness shall be in accordance with *ACI 302.1R-04 "Guide for Concrete Floor and Slab Construction".*

CONCRETE SLAB RECOMMENDED SPECIFICATIONS:

1) Concrete slab shall have a minimum thickness of 5" (some areas may require 6") and placed on 4" of compacted gravel or compacted sub base.
2) NRS. INC., recommends that the concrete slab be reinforced with 6x6-W2.1xW2.1 welded wire fabric at 1 1/2" concrete cover from the top. In lieu of welded wire fabric, steel fiber substitution requires OWNER approval and his understanding of potential maintenance issues.
3) Contractor may substitute blended fiber reinforcing, provided the blend consists of multifilament polypropylene fibers and cold drawn steel wire fibers. Novamesh 950 or approved equivalent, applied at a dosage rate of 5lb/CY unless specified otherwise or a different recommendation is made by the manufacturer.
4) Crack control joints shall be sawed into slab to form approximate square patterns. The maximum spacing for control joints shall not exceed 13'-6", UNLESS INDICATED OTHERWISE. The bleacher frames shall not be set on control joints. The designer shall contact NRS to coordinate joint spacing requirements with the specific bleacher design.
5) The slab may be sloped a maximum of 1/8 inch per foot for drainage. The maximum overall out of level slope for the slab perpendicular to the seats (front to rear) shall not exceed 2" and parallel to the seats (end to end) shall not exceed 4".

① CONCRETE SLAB SECTION

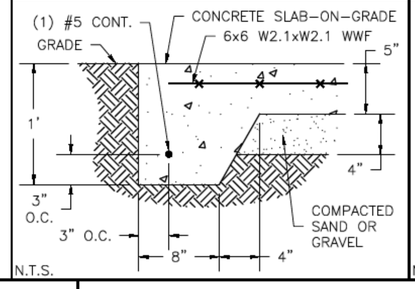

N.T.S.

② CONTROL JOINT DETAIL

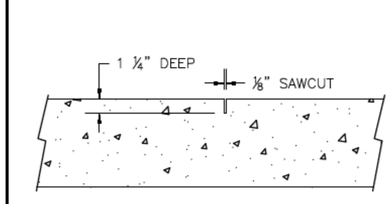

N.T.S.

BUILTRITE BLEACHERS .com

T/F: 866-281-5337 - WWW.ALUMINUM-BLEACHERS.COM

MODEL:	BRB-0419.5ASPR				
DESCRIPTION:	NON–ELEV. 4 ROW x 19'–6" FOUNDATION PLAN				
DRAWN BY: HIT	DATE: 9/7/23	REVISION: 0	SCALE: N.T.S.	SHEET NUMBER: 3.FP	

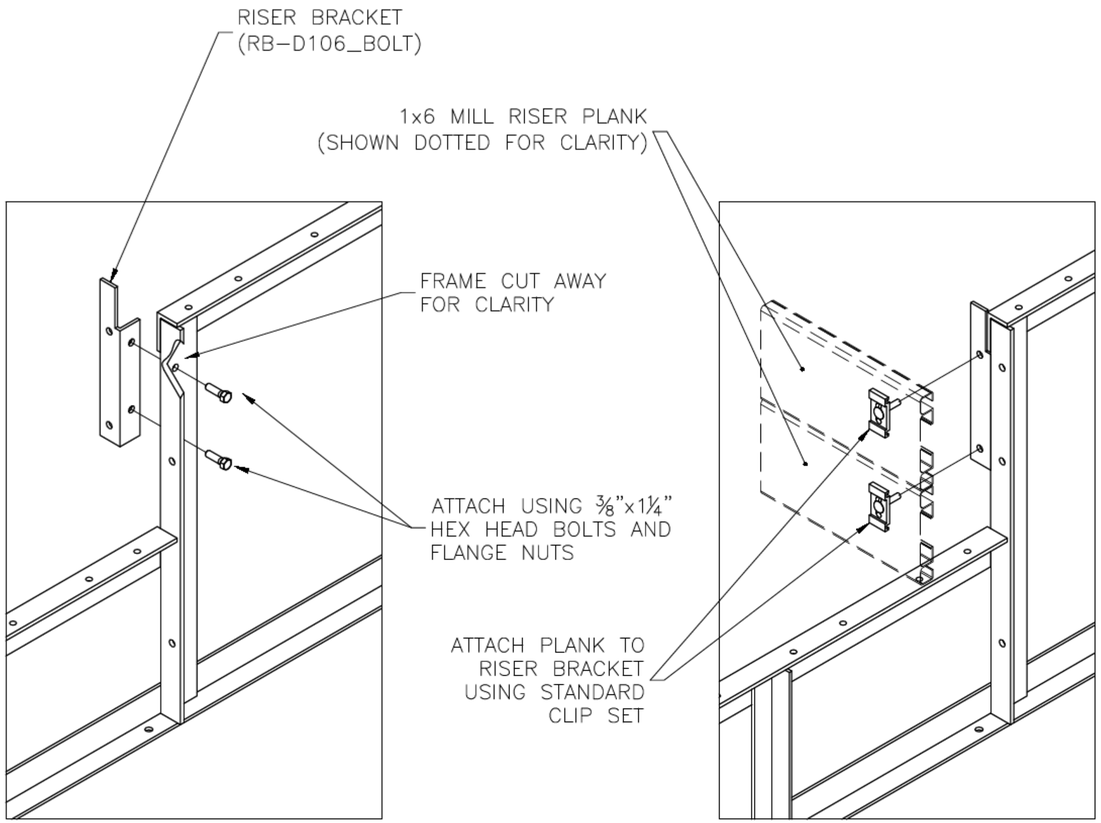

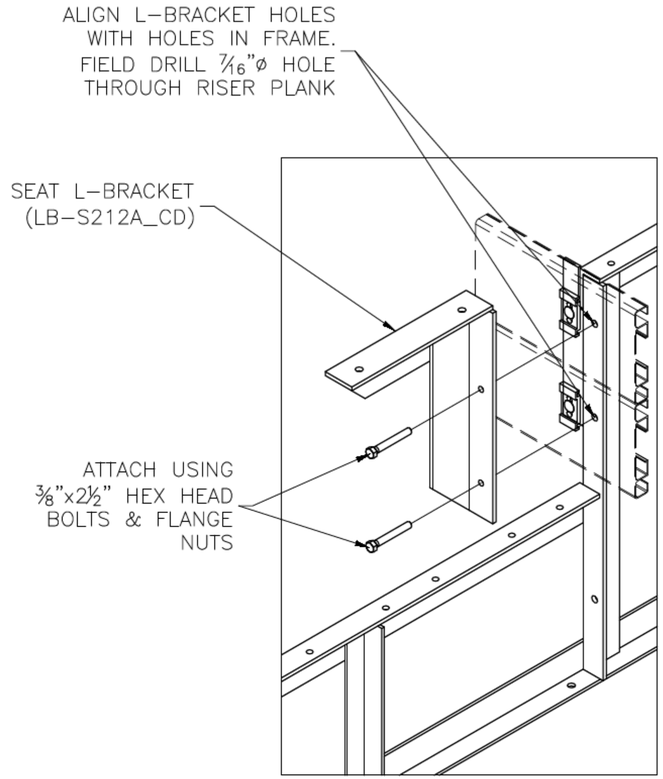

AISLE MID–STEP

21
—

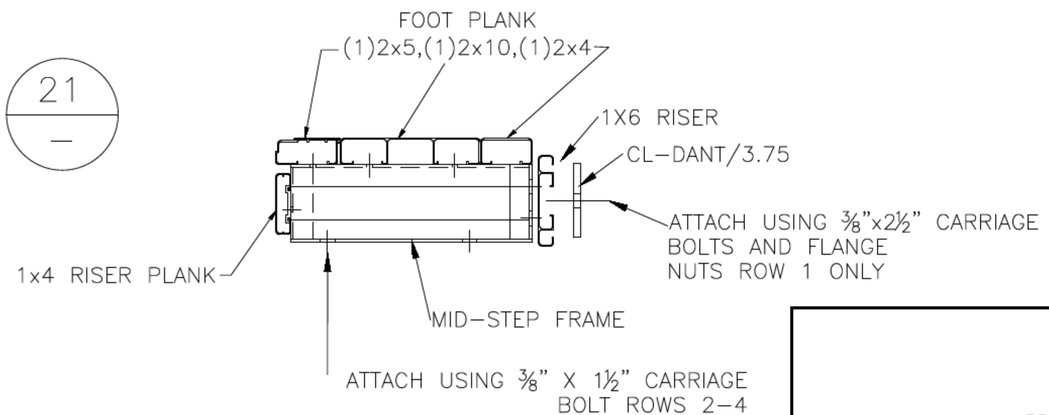

BUILTRITE BLEACHERS .com

T/F: 866-281-5337 - WWW.ALUMINUM-BLEACHERS.COM

MODEL: BRB-0419.5ASPR					
DESCRIPTION: NON–ELEV. 4 ROW x 19'–6" ASSEMBLY PREP					
DRAWN BY: HIT	DATE: 9/7/23	REVISION: 0	SCALE: N.T.S.	SHEET NUMBER: 4.BA	

(19) RB–D106/BOLT

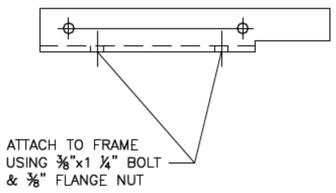

(20) LB–S212A_CD

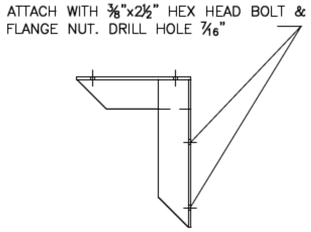

SEE PRINT # BA.2 FOR ATTACHMENT DETAILS

BUILTRITE BLEACHERS .com

T/F: 866-281-5337 - WWW.ALUMINUM-BLEACHERS.COM

MODEL: BRB-0419.5ASPR					
DESCRIPTION: NON–ELEV. 4 ROW x 19'–6" ASSEMBLY SECTION VIEW					
DRAWN BY: HIT	DATE: 9/7/23	REVISION: 0	SCALE: N.T.S.	SHEET NUMBER: 5.BA	

DETAIL "A" - CONCRETE ANCHOR ATTACHMENT

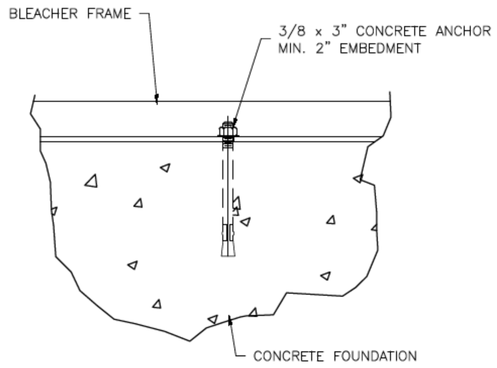

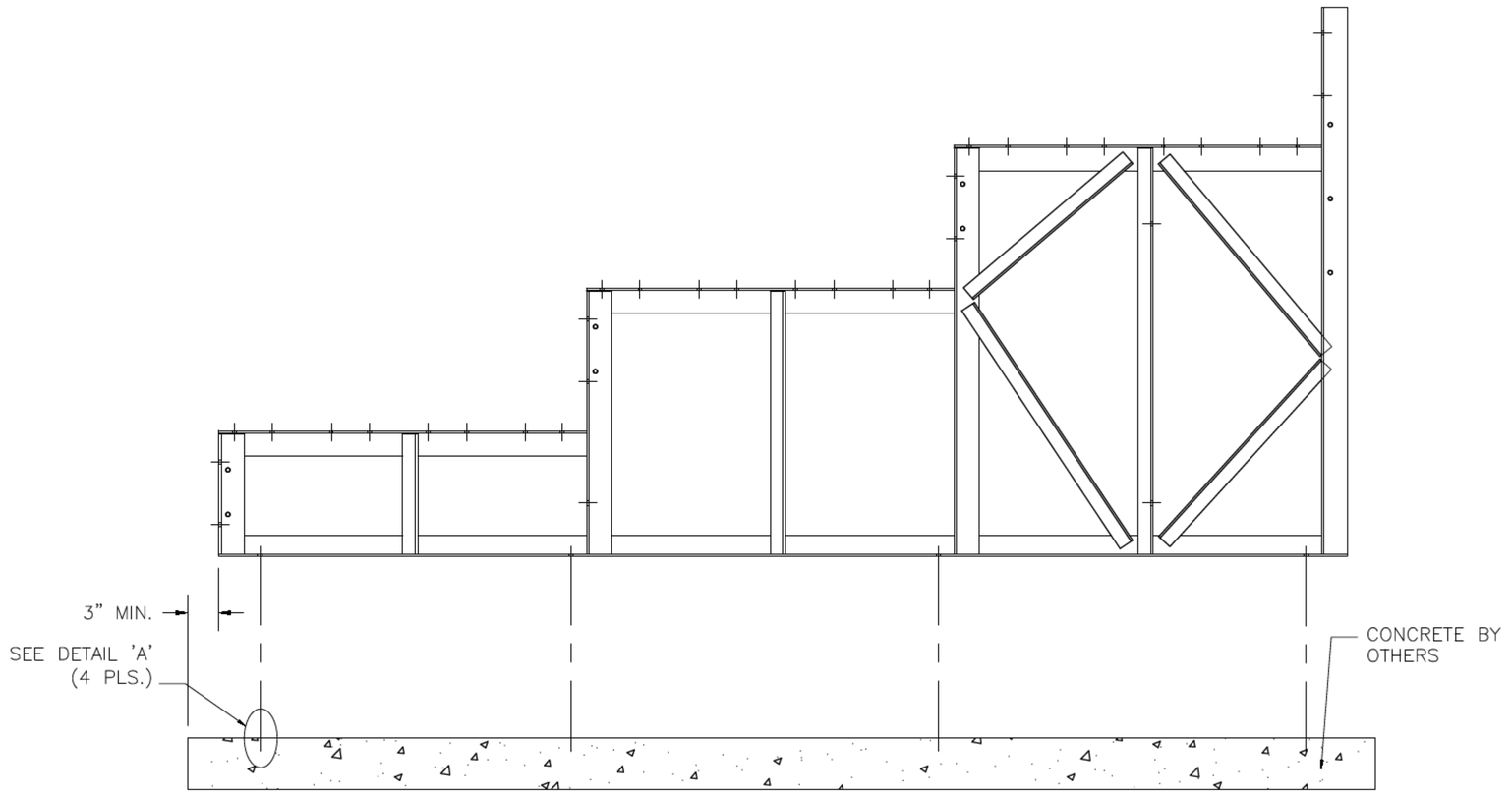

* CONCRETE WEDGE ANCHORS NOT INCLUDED WITH ALL UNITS. IF USING OTHER ANCHORING SYSTEM, SKIP THIS STEP AND REFER TO INSTRUCTIONS SPECIFIC TO THE ANCHORING SYSTEM PURCHASED FOR YOUR UNIT.

BUILTRITE BLEACHERS .com
T/F: 866-281-5337 - WWW.ALUMINUM-BLEACHERS.COM

MODEL: BRB-0419.5ASPR					
DESCRIPTION: NON–ELEV. 4 ROW BLEACHER ANCHORING PLAN					
DRAWN BY: HIT	DATE: 9/7/23	REVISION: 0	SCALE: N.T.S.	SHEET NUMBER: 6.AP	

PLANK INSTALLATION NOTE:

FOR EASE OF INSTALLATION, NRS RECOMMENDS INSTALLING PLANK ONE ROW AT A TIME, IN THE FOLLOWING ORDER:

-DOUBLE 1x6 RISER
-L-BRACKETS (SEE BA.1)
-MIDSTEP ASSEMBLY (SEE VA.1)
-MILL FOOT PLANK

BEGIN INSTALLATION STARTING AT ROW 1, AND WORK YOUR WAY UP THE BLEACHER AS YOU GO. ONCE THESE PLANKS ARE IN PLACE, INSTALL THE SEAT PLANK, BACKREST PLANK AND VERTICAL AISLE ASSEMBLY.

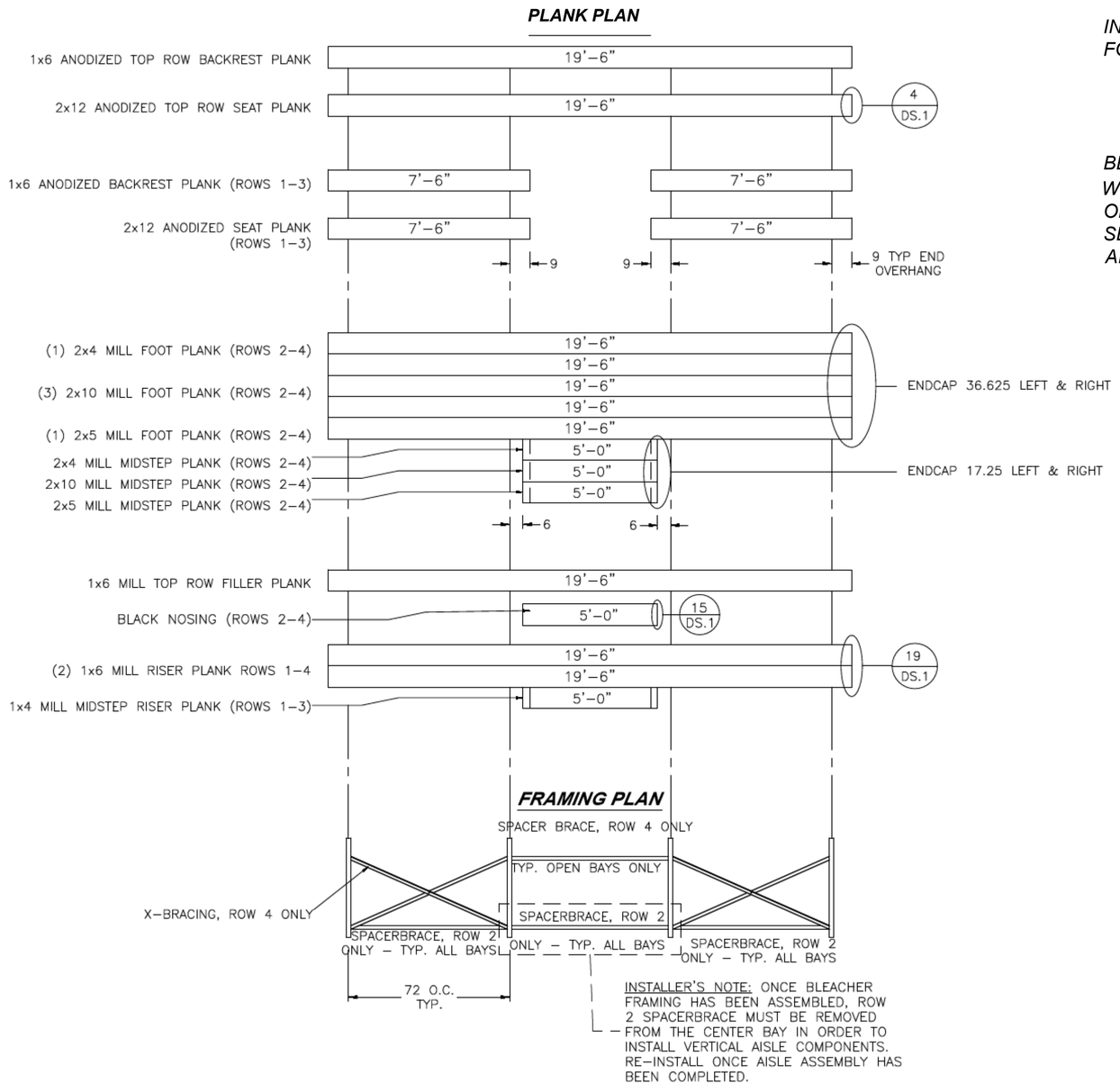

BUILTRITE BLEACHERS .com
T/F: 866-281-5337 - WWW.ALUMINUM-BLEACHERS.COM

MODEL: BRB-0419.5ASPR				
DESCRIPTION: NON–ELEV. 4 ROW x 19'–6" PLANK & FRAMING PLAN				
DRAWN BY: HIT	DATE: 9/7/23	REVISION: 0	SCALE: N.T.S.	SHEET NUMBER: 7.PF

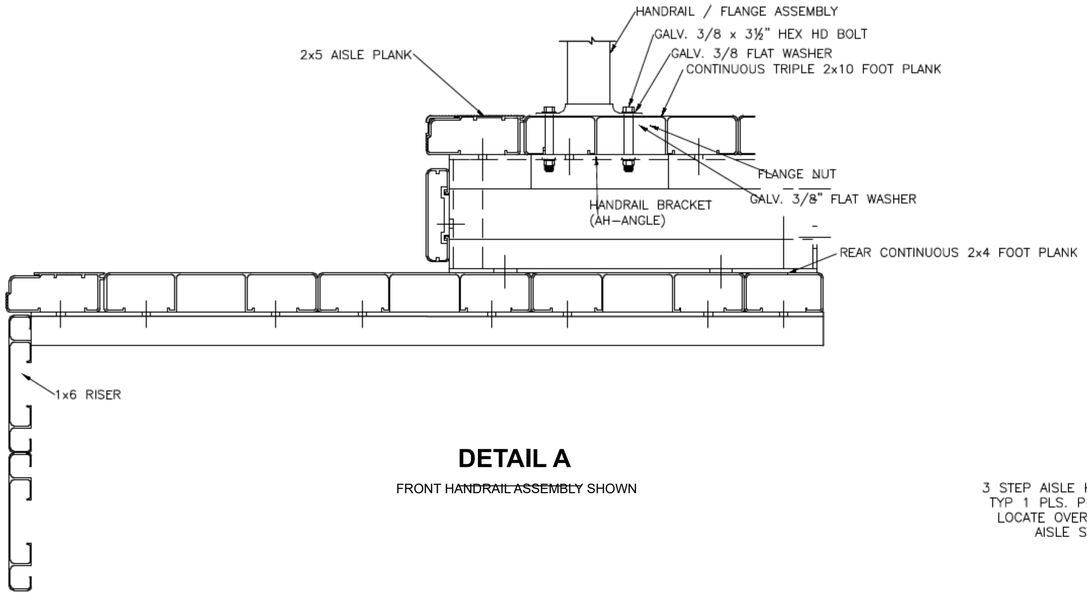

DETAIL A

FRONT ~~HANDRAIL ASSEMBLY~~ SHOWN

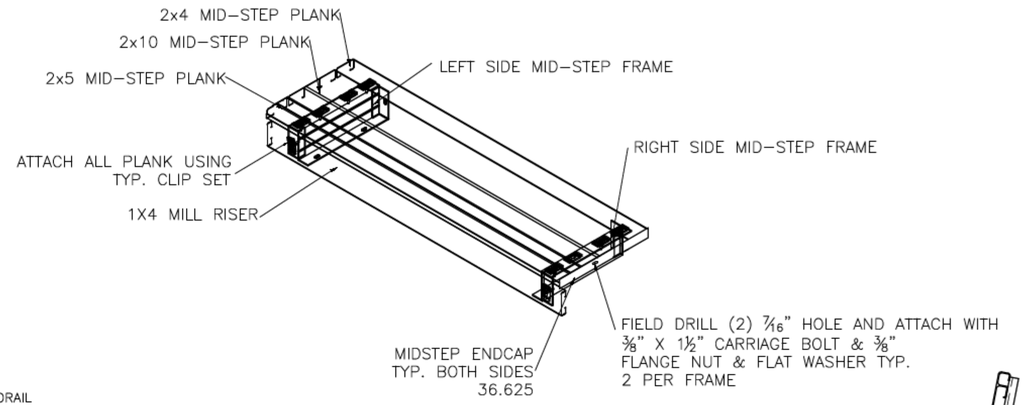

ALIGN EDGE OF FLANGE APPROX. ½" FROM THE LEADING EDGE OF THE FRONTMOST MIDSTEP 2x10 FOOT PLANK (NOT THE 2x5 MIDSTEP PLANK). SLIGHTLY ADJUST FLANGE LOCATION, IF NECESSARY, SO THAT THE BOLT HOLE IS NOT DRILLED INTO A VERTICAL LEG OF THE PLANK. DRILL ø7/16" HOLES (FOR 3/8" BOLT). ASSEMBLE AS SHOWN USING GALV. STEEL BOLTS, FLAT WASHERS, AND NUTS.

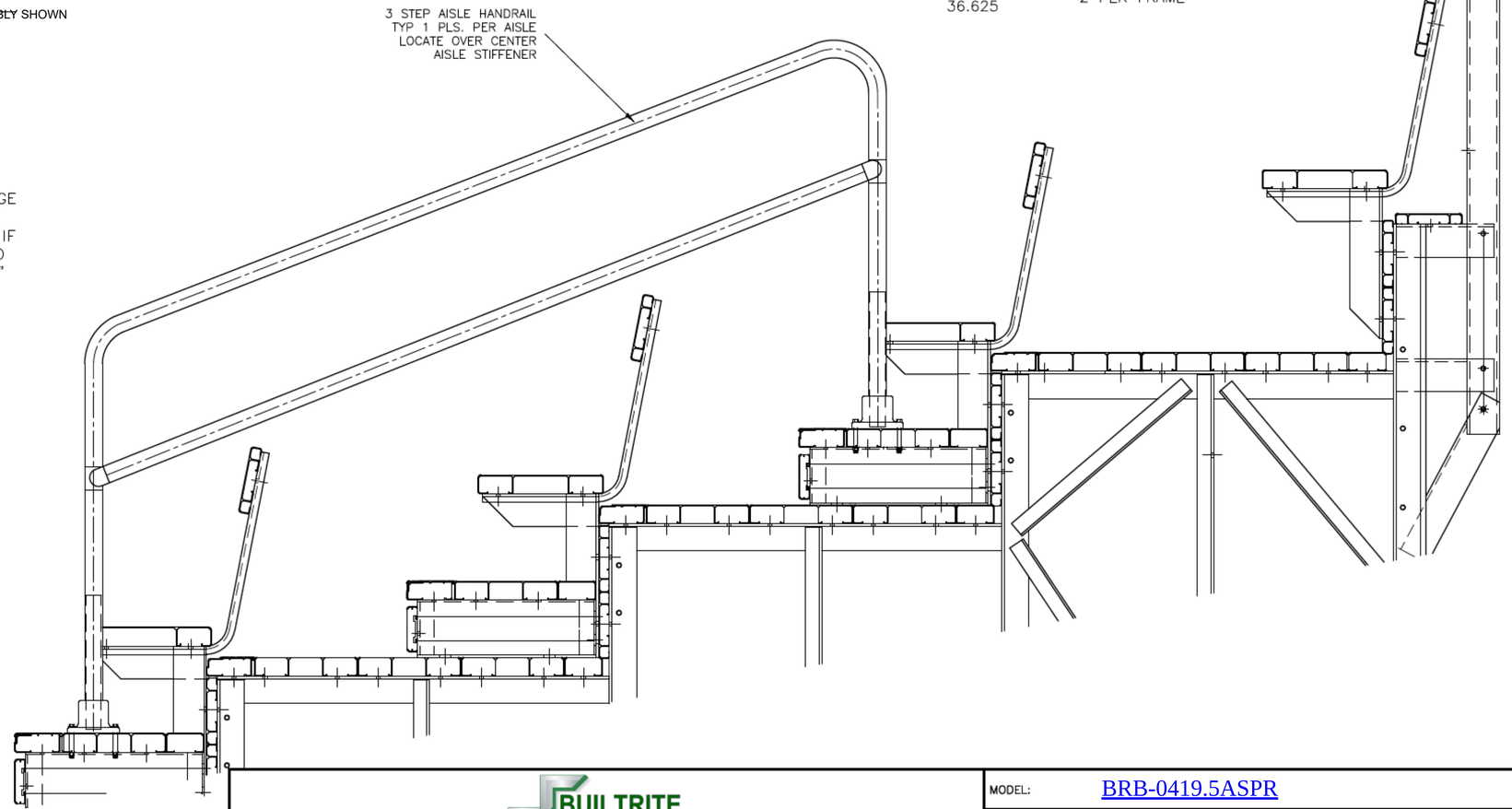

BUILTRITE BLEACHERS .com

T/F: 866-281-5337 - WWW.ALUMINUM-BLEACHERS.COM

MODEL: BRB-0419.5ASPR					
DESCRIPTION: NON-ELEV. 4 ROW VERTICAL AISLE ASSEMBLY					
DRAWN BY: HIT	DATE: 9/7/23	REVISION: 0	SCALE: N.T.S.	SHEET NUMBER: 8.VA	

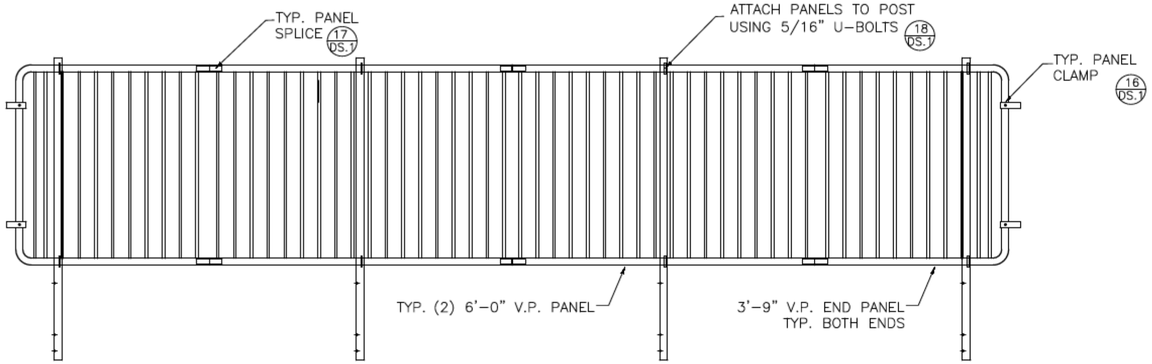

REAR GUARDRAIL

(FRONT VIEW)

SIDE GUARDRAIL

(FRONT VIEW)

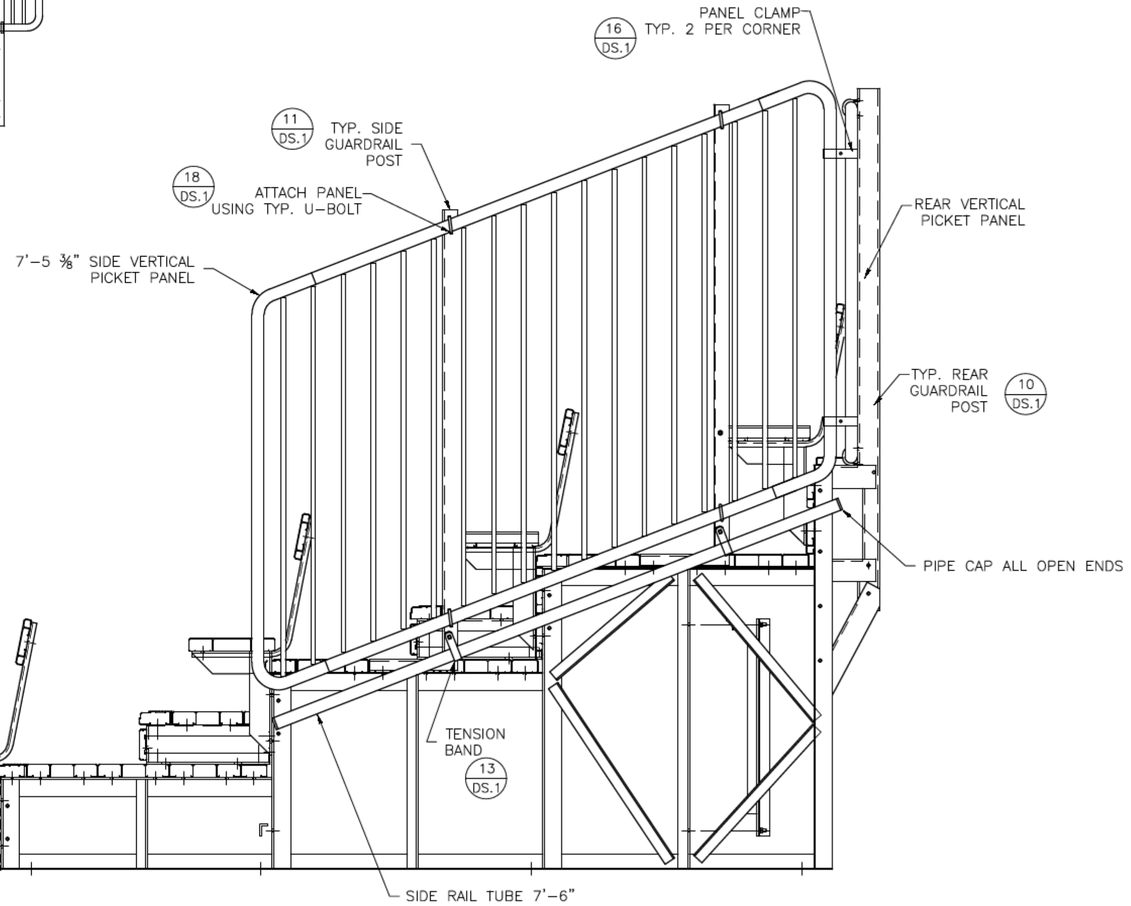

BUILTRITE BLEACHERS .com

T/F: 866-281-5337 - WWW.ALUMINUM-BLEACHERS.COM

MODEL:	BRB-0419.5ASPR				
DESCRIPTION:	NON-ELEV. 4 ROW x 19'-6" GUARDRAIL ASSEMBLY				
DRAWN BY: HIT	DATE: 9/7/23	REVISION: 0	SCALE: N.T.S.	SHEET NUMBER: 9.GR	

1 TYP X-BRACE CONN. W/ 1¼ BOLT

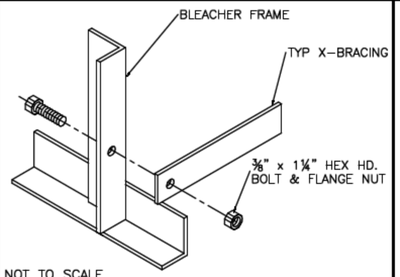

NOT TO SCALE

2 TYP 2x10/2x12 PLANK ATTCH.

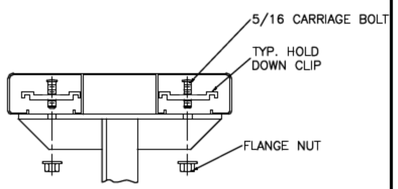

NOT TO SCALE

3 TYP 1x6 PLANK ATTACHMENT

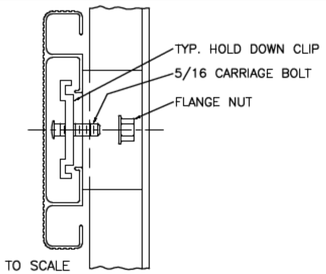

NOT TO SCALE

4 TYP 2x10/2x12 ENDCAP ATTACH.

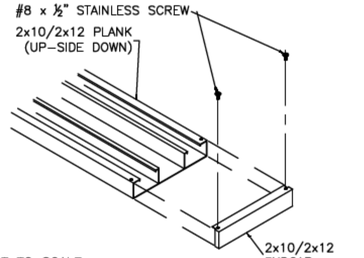

NOT TO SCALE

5 TYP 1x6 ENDCAP ATTACHMENT

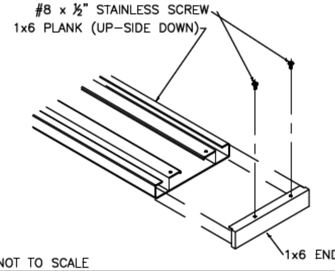

NOT TO SCALE

6 TYP 2x10 /2X12 SPLICE CONN.

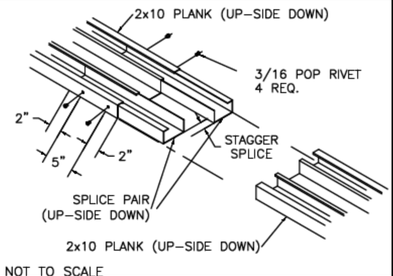

NOT TO SCALE

7 TYP 1x6 ENDCAP ATTACHMENT

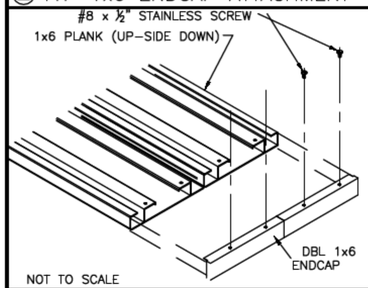

NOT TO SCALE

8 TYP 1x6 SPLICE CONN.

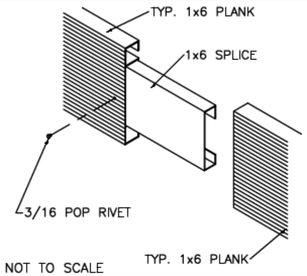

NOT TO SCALE

9 DBL. 2x10 ENDCAP ATTACHMENT

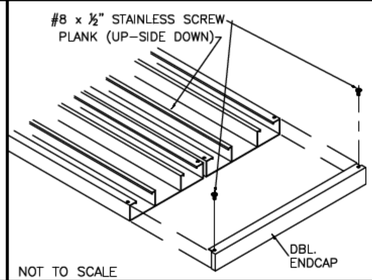

NOT TO SCALE

10 REAR GUARDRAIL POST ATTACH.

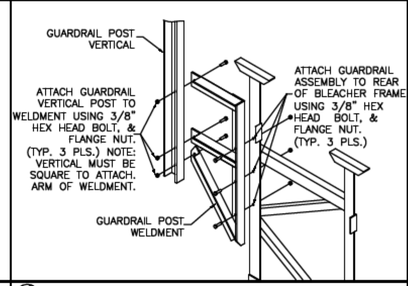

11 SIDE GD. RAIL POST INSTALLATION

*NOT TO SCALE

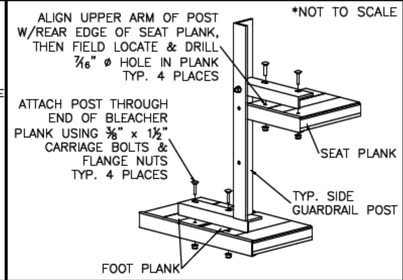

12 PIPE COUPLER INSTALLATION

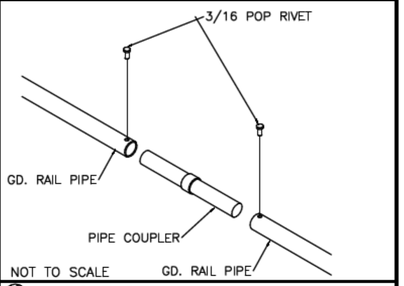

NOT TO SCALE

13 TENSION BAND ATTACHMENT

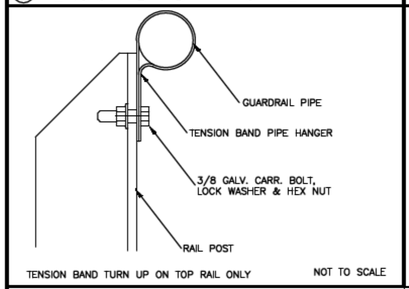

TENSION BAND TURN UP ON TOP RAIL ONLY NOT TO SCALE

14 TYP X-BRACE CONN. W/ 1¼ BOLT

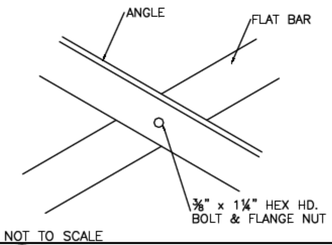

NOT TO SCALE

15 TYP 2x5 PLANK/NOSING ATTACH.

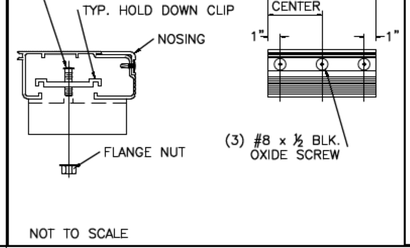

NOT TO SCALE

16 PANEL CLAMP DETAIL

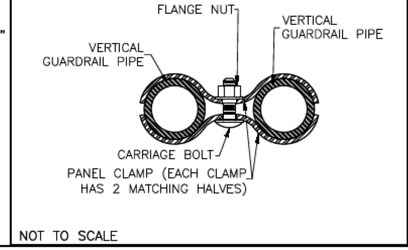

NOT TO SCALE

17 PIPE COUPLER INSTALLATION

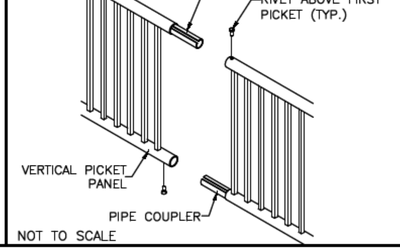

NOT TO SCALE

18 U-BOLT DETAIL

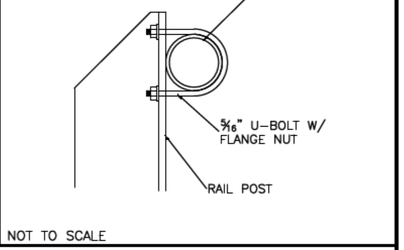

NOT TO SCALE

19 RB-D106/BOLT

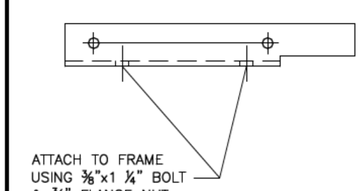

20 LB-S212A_CD

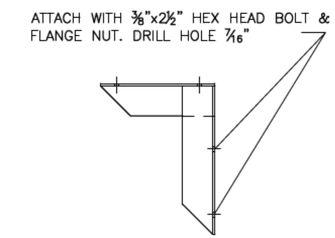

BUILTRITE BLEACHERS .com

T/F: 866-281-5337 - WWW.ALUMINUM-BLEACHERS.COM

MODEL: BRB-0419.5ASPR					
DESCRIPTION: TYPICAL BLEACHER ASSEMBLY DETAILS					
DRAWN BY: HIT	DATE: 9/7/23	REVISION: 0	SCALE: N.T.S.	SHEET NUMBER: 10.DS	